## Make: MERCEDES-BENZ

## Model: CLA Shooting Brake

## Part Number: ADB02765

## Vehicle Manufacturing/Engine:

ADB02765

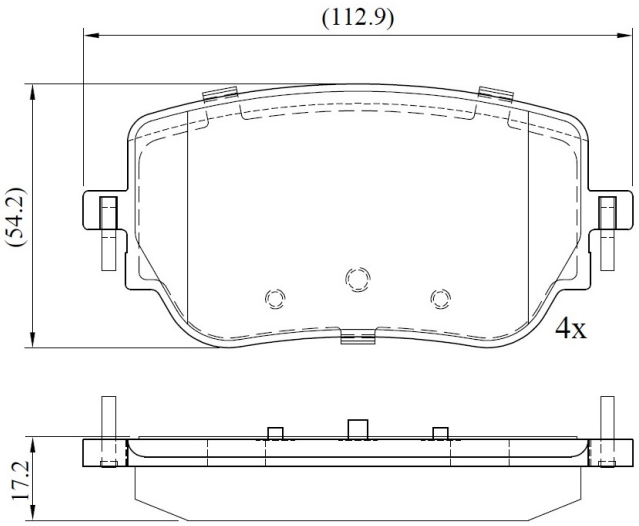


### Specifications

| | | |
|---|---|---|
| **Fitting Position** | : | Rear |
| **Model Date** | : | 2019- |

| | | |
|---|---|---|
| **Or. Caliper** | : | |
| **WVA** | : | 22987 |
| **FMSI** | : | |
| **Length** | : | 113.7 |
| **Width** | : | 54.2 |
| **Thickness** | : | 17.2 |