Make: MERCEDES-BENZ

Model: E-CLASS T-Model

Part Number: ADB02977

Vehicle Manufacturing/Engine:

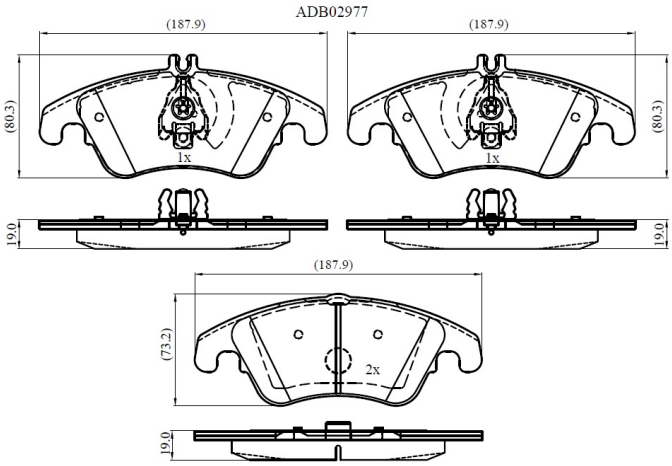

Specifications

Fitting Position	:	Front
Model Date	:	2009-2011
Or. Caliper	:	
WVA	:	24310

FMSI	:
Length	:
Width	:
Thickness	: