Make: MERCEDES-BENZ

Model: E-Class

Part Number: ADB03169

Vehicle Manufacturing/Engine:

ADB03169

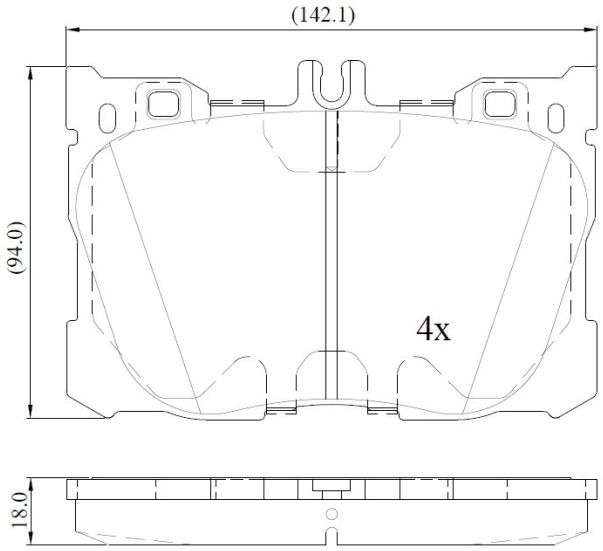

Specifications

Fitting Position	:	Front

Model Date	:	2018-
Or. Caliper	:	
WVA	:	22586
FMSI	:	
Length	:	142
Width	:	96
Thickness	:	18.9