Make: MERCEDES-BENZ

Model: GLB

Part Number: ADB02864

Vehicle Manufacturing/Engine:

ADB02864

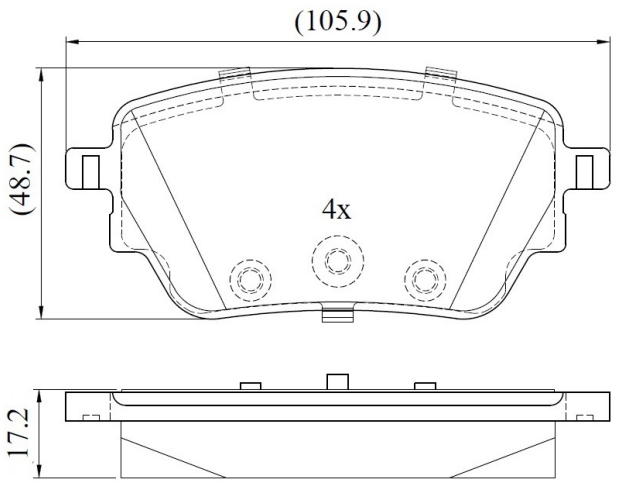

Specifications

Fitting Position	:	Rear
Model Date	:	2019-

Or. Caliper	:	
WVA	:	22986
FMSI	:	
Length	:	106.2
Width	:	48.8
Thickness	:	17.3