Make: MERCEDES-BENZ

Model: GLE Coupe

Part Number: ADB02642

Vehicle Manufacturing/Engine:

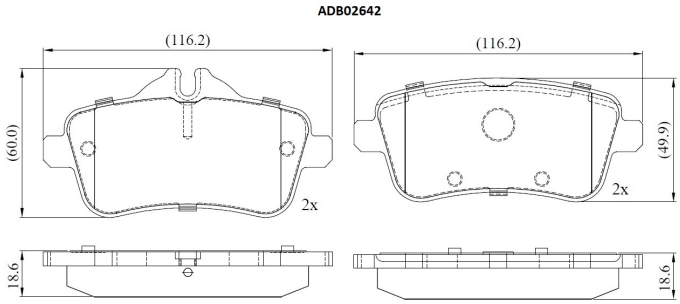

Specifications

Fitting Position	:	Rear
Model Date	:	2015-2019
Or. Caliper	:	
WVA	:	2,52,15,25,216
FMSI	:	
Length	:	116.3

Width	:	59.8
Thickness	:	18.5