Make: MERCEDES-BENZ

Model: S-CLASS

Part Number: ADB03165

Vehicle Manufacturing/Engine:

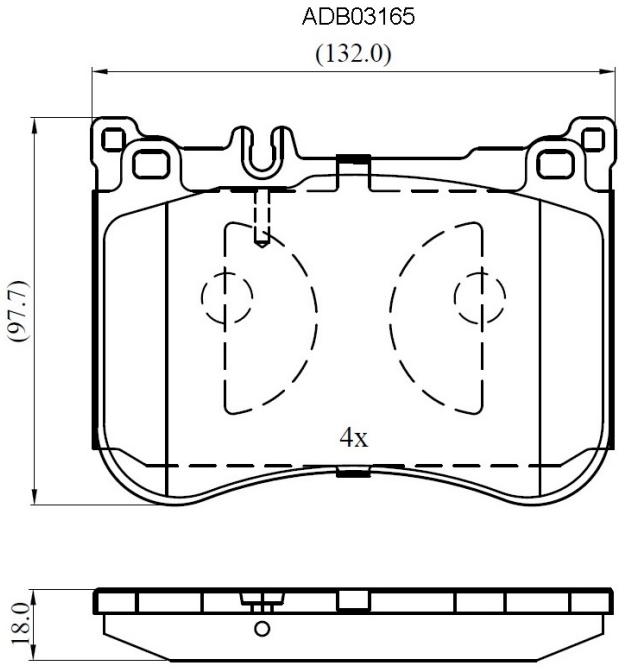

Specifications

Fitting Position	:	Front
Model Date	:	2017-
Or. Caliper	:	
WVA	:	25179
FMSI	:	
Length	:	132
Width	:	97.5
Thickness	:	17.8