Make: MERCEDES-BENZ

Model: SPRINTER 5-t Van

Part Number: ADB02853

Vehicle Manufacturing/Engine:

ADB02853

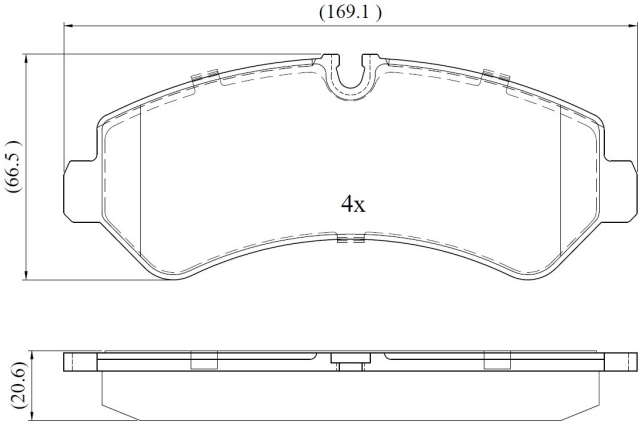

Specifications

Fitting Position	:	Rear
Model Date	:	2018-
Or. Caliper	:	
WVA	:	22791

FMSI	:	
Length	:	169.2
Width	:	66.6
Thickness	:	20.5