Make: MERCEDES-BENZ

Model: VITO Bus

Part Number: ADB23187

Vehicle Manufacturing/Engine:

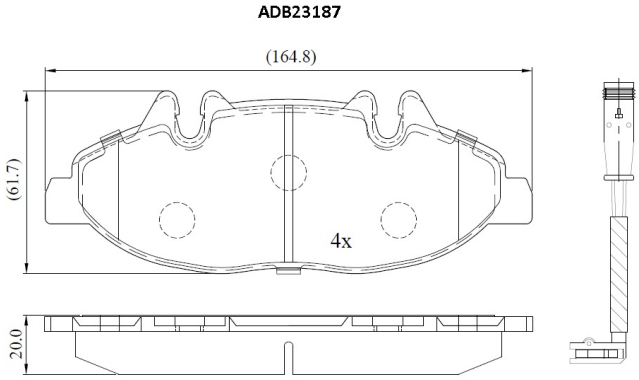

Specifications

Fitting Position	:	Front
Model Date	:	2003-
Or. Caliper	:	
WVA	:	24007
FMSI	:	

Length	:	164.8
Width	:	61.7
Thickness	:	20