Make: MERCEDES-BENZ

Model: VITO Bus

Part Number: ADB23296

Vehicle Manufacturing/Engine:

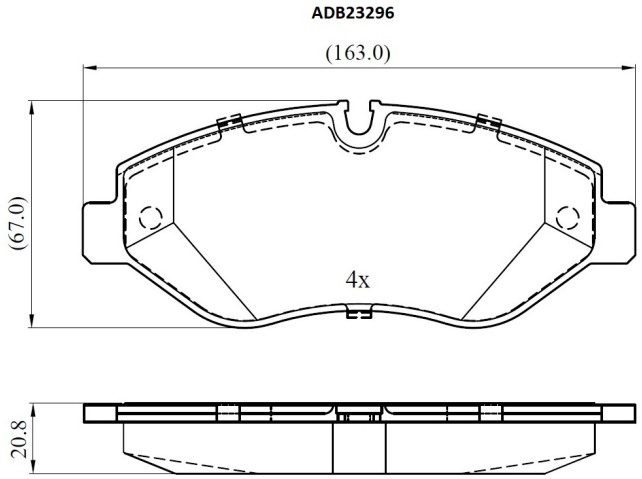

Specifications

Fitting Position	:	Front
Model Date	:	2007-2014
Or. Caliper	:	

WVA	:	29192
FMSI	:	
Length	:	163
Width	:	67
Thickness	:	20.8