## Make: MERCEDES-BENZ

## Model: VITO Dualiner

## Part Number: ADB03204

## Vehicle Manufacturing/Engine:

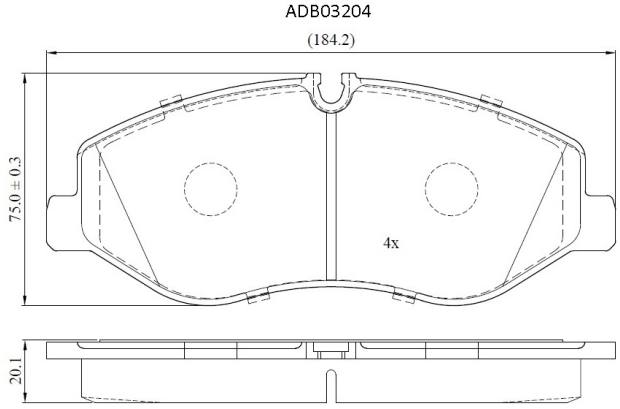


### Specifications

| | | |
|---|---|---|
| **Fitting Position** | : | Front |
| **Model Date** | : | 2014- |
| **Or. Caliper** | : | |
| **WVA** | : | 22062 |

| | | |
|---|---|---|
| **FMSI** | : | |
| **Length** | : | 184.2 |
| **Width** | : | 75 |
| **Thickness** | : | 20.1 |