Make: MERCEDES-BENZ

Model: VITO Van

Part Number: ADB03204

Vehicle Manufacturing/Engine:

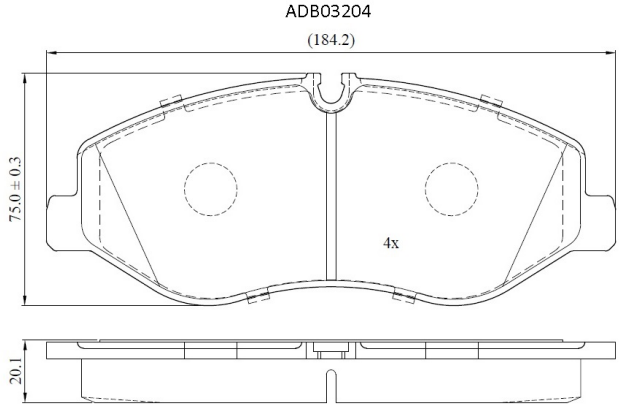

Specifications

Fitting Position	:	Front
Model Date	:	2020-
Or. Caliper	:	
WVA	:	22062

FMSI	:	
Length	:	184.2
Width	:	75
Thickness	:	20.1