Make: MERCEDES

Model: 190 (W201 Series)

Part Number: ADB0328

Vehicle Manufacturing/Engine:

ADB0328

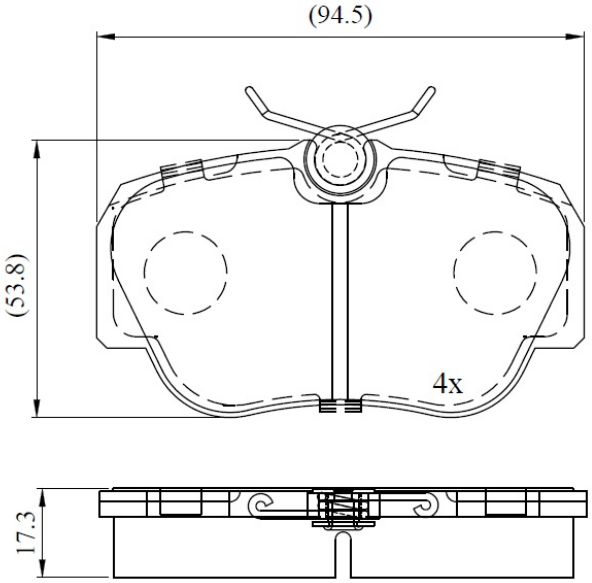

Specifications

Fitting Position	:	Front

Model Date	:	01/87-05/93
Or. Caliper	:	Lucas
WVA	:	21055
FMSI	:	
Length	:	94.5
Width	:	53.8
Thickness	:	17.25