Make: MERCEDES

Model: 190 (W201 Series)

Part Number: ADB0343

Vehicle Manufacturing/Engine:

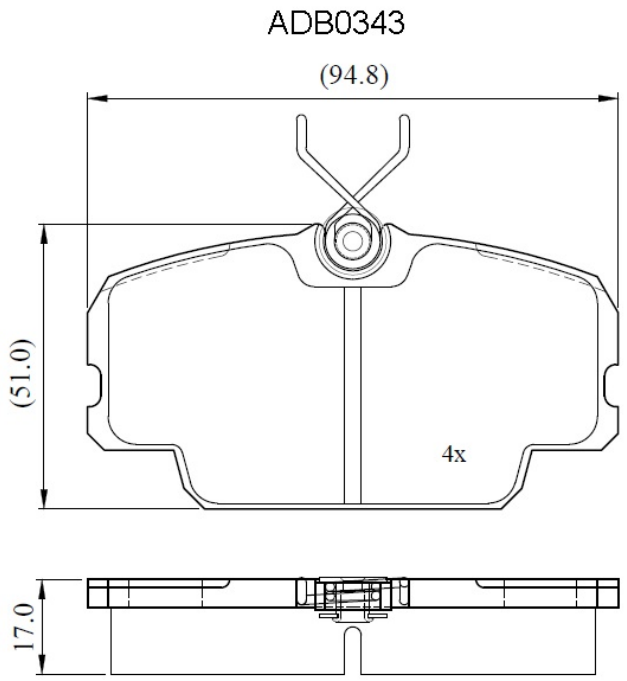

Specifications

Fitting Position	:	Front
Model Date	:	01/82-01/87
Or. Caliper	:	Lucas
WVA	:	2,07,49,20,890
FMSI	:	
Length	:	94.75
Width	:	51
Thickness	:	17