Make: MERCEDES

Model: A Class (A168)

Part Number: ADB0748

Vehicle Manufacturing/Engine:

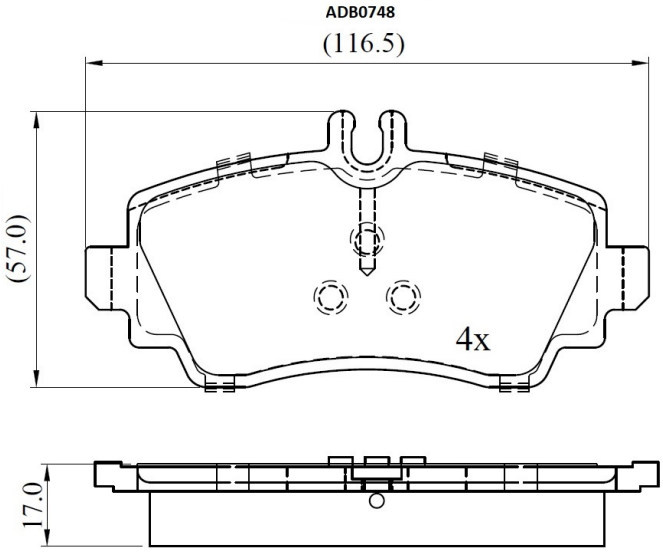

Specifications

Fitting Position	:	Front
Model Date	:	01/98->
Or. Caliper	:	Lucas

WVA	:	23070
FMSI	:	
Length	:	116.5
Width	:	57
Thickness	:	17