Make: MERCEDES

Model: C Class (202, S202, W202 ->09/00)

Part Number: ADB0503

Vehicle Manufacturing/Engine:

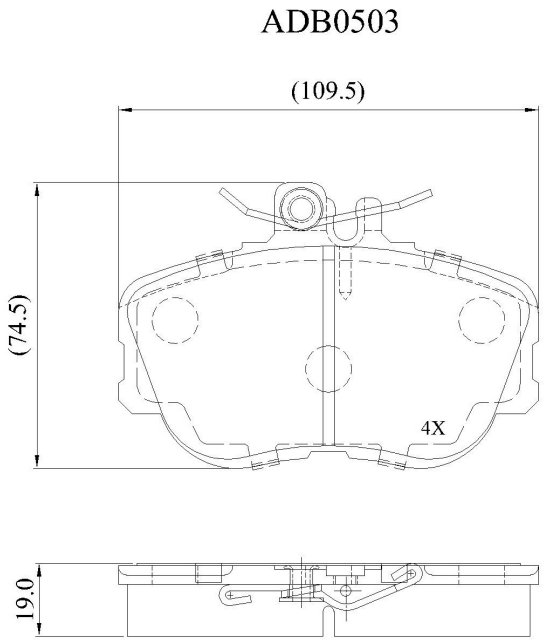

Specifications

Fitting Position	:	Front

Model Date	:	06/93-09/00
Or. Caliper	:	Lucas
WVA	:	21439
FMSI	:	
Length	:	109.5
Width	:	74.5
Thickness	:	19