Make: MERCEDES

Model: C Class (C203,W203,T203 09/00->)

Part Number: ADB0915

Vehicle Manufacturing/Engine:

ADB0915

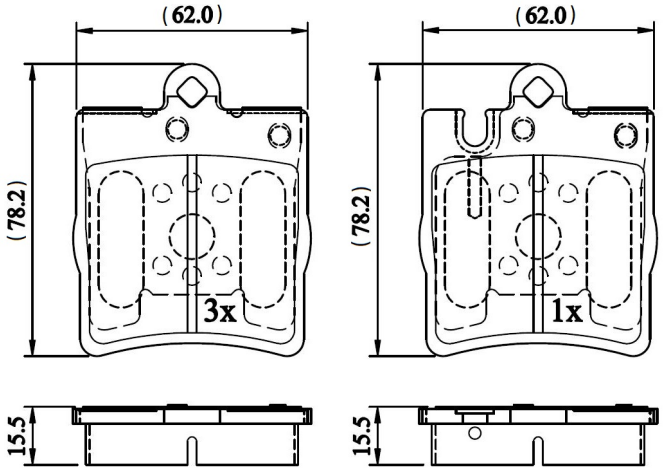

Specifications

Fitting Position	:	Rear
Model Date	:	09/00->
Or. Caliper	:	Ate

WVA	:	21899
FMSI	:	
Length	:	62
Width	:	78.2
Thickness	:	15.5