Make: MERCEDES

Model: CLA 200 CDI /d

Part Number: ADB32208

Vehicle Manufacturing/Engine:

ALLIED NIPPON PRIVATE LIMITED
(Formerly known as Allied Nippon Ltd.)
CIN : U34300DL1988PTC030910

ADB32208

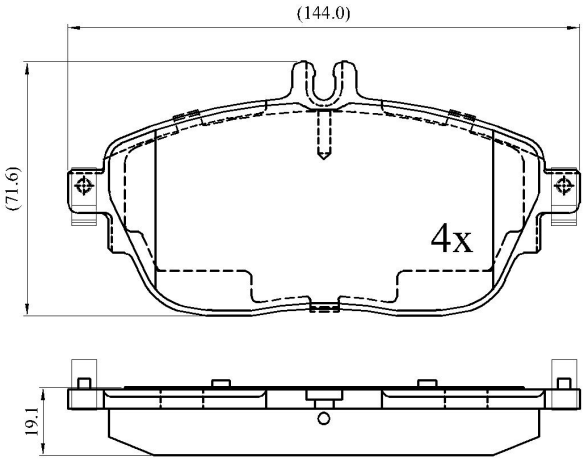

Specifications

Fitting Position	:	Front

Model Date	:	07/14-
Or. Caliper	:	
WVA	:	24869
FMSI	:	
Length	:	143.9
Width	:	72.5
Thickness	:	19.1