Make: MERCEDES

Model: E Class (W124)

Part Number: ADB2360

Vehicle Manufacturing/Engine:

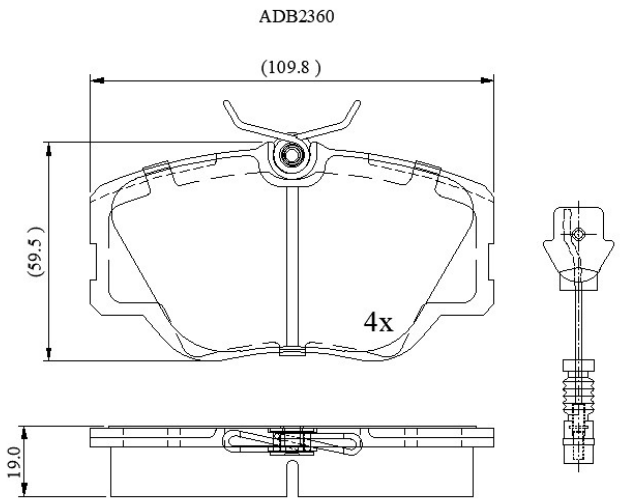

Specifications

Fitting Position	:	Front
Model Date	:	06/93-06/95
Or. Caliper	:	Lucas

WVA	:	20941
FMSI	:	
Length	:	109.8
Width	:	59.5
Thickness	:	19