Make: MERCEDES

Model: E Class

Part Number: ADB01209

Vehicle Manufacturing/Engine:

ADB01209

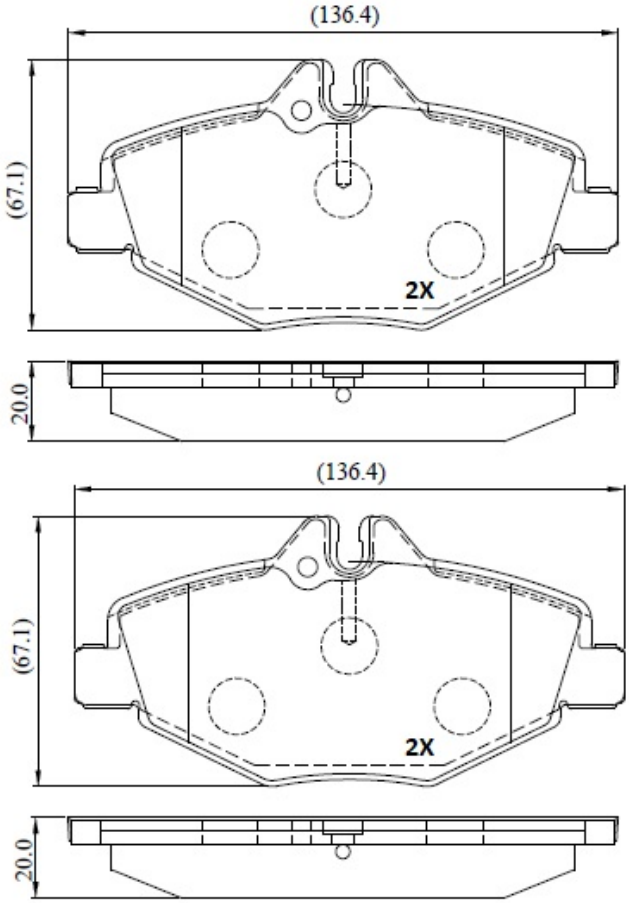

Specifications

Fitting Position	:	Front
Model Date	:	03/02->
Or. Caliper	:	Bosch
WVA	:	23743
FMSI	:	
Length	:	136.5
Width	:	67.5
Thickness	:	20