Make: MERCEDES

Model: S Class (W140)

Part Number: ADB0702

Vehicle Manufacturing/Engine:

ADB0702

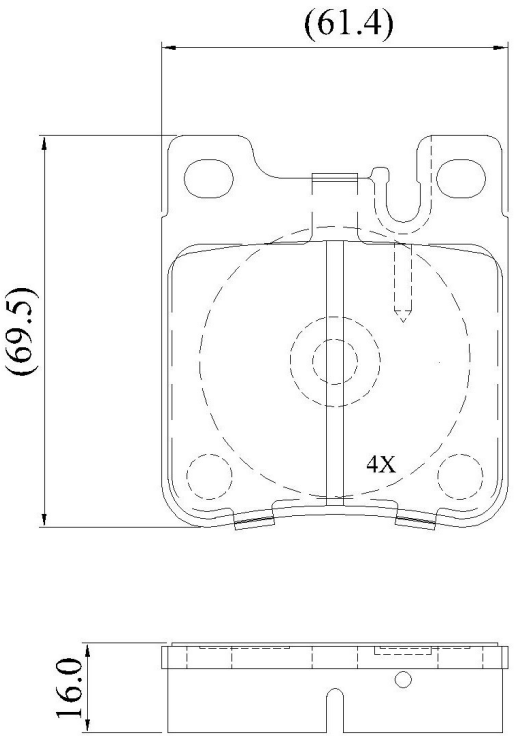

Specifications

Fitting Position	:	Rear
Model Date	:	06/93-10/98

Or. Caliper	:	Ate/Bendix
WVA	:	21305
FMSI	:	
Length	:	61.4
Width	:	69.5
Thickness	:	16