Make: MERCEDES

Model: S Class

Part Number: ADB06020

Vehicle Manufacturing/Engine:

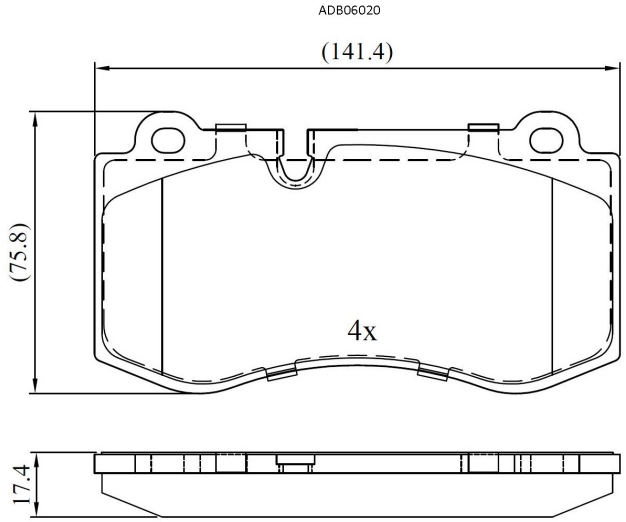

Specifications

Fitting Position	:	Front
Model Date	:	06->
Or. Caliper	:	

WVA	:	
FMSI	:	
Length	:	141.5
Width	:	75.8
Thickness	:	17.4