Make: MERCEDES

Model: Vaneo

Part Number: ADB01318

Vehicle Manufacturing/Engine:

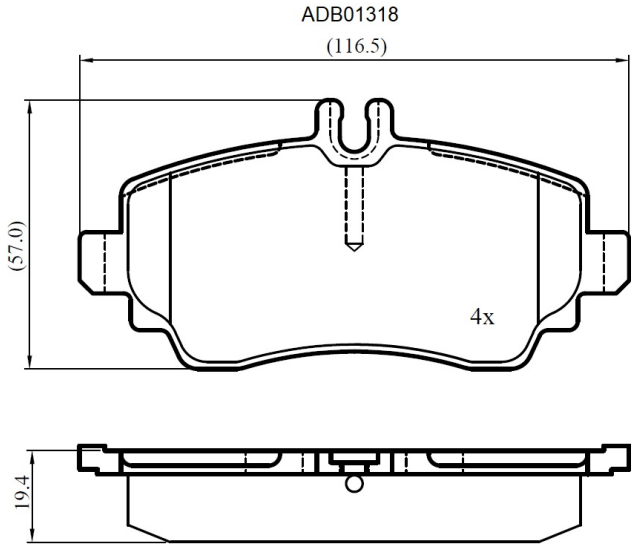

Specifications

Fitting Position	:	Front
Model Date	:	06/02->

Or. Caliper	:	Lucas
WVA	:	23070
FMSI	:	
Length	:	116.5
Width	:	57
Thickness	:	19.4