Make: MITSUBISHI

Model: Colt/ Mirage (->92)

Part Number: ADB0235

Vehicle Manufacturing/Engine:

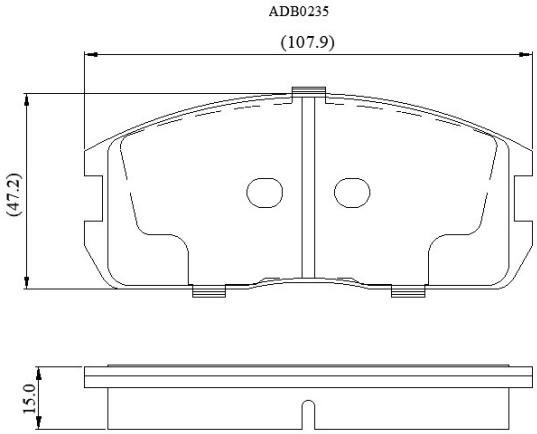

Specifications

Fitting Position	:	Front
Model Date	:	08/88-01/92
Or. Caliper	:	Sumitomo
WVA	:	21126

FMSI	:	
Length	:	107.9
Width	:	47.2
Thickness	:	15