Make: MITSUBISHI

Model: Colt/ Mirage (->92)

Part Number: ADB0469

Vehicle Manufacturing/Engine:

ADB0469

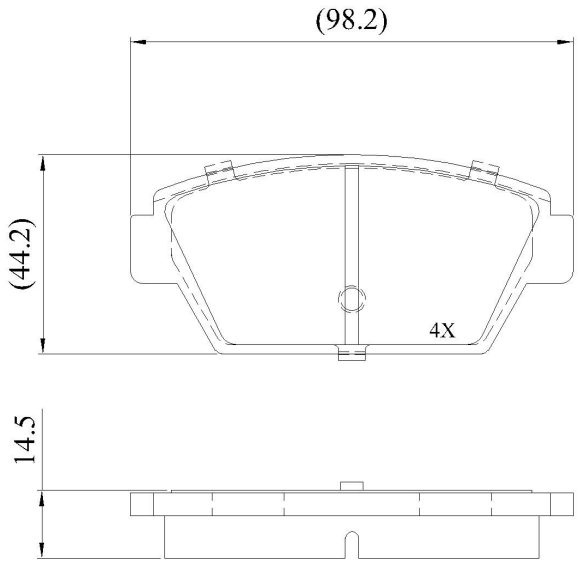

Specifications

Fitting Position	:	Rear

Model Date	:	08/88-01/92
Or. Caliper	:	Akebono
WVA	:	21125
FMSI	:	
Length	:	98.2
Width	:	44.2
Thickness	:	14.5