Make: MITSUBISHI

Model: L200

Part Number: ADB3295

Vehicle Manufacturing/Engine:

ADB3295

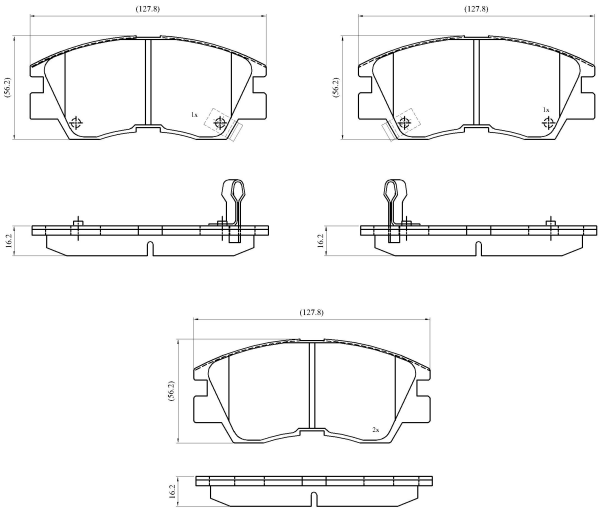

Specifications

Fitting Position	:	Front
Model Date	:	01/87-06/95
Or. Caliper	:	Sumitomo
WVA	:	21373
FMSI	:	
Length	:	127.8
Width	:	56.2
Thickness	:	16.5