Make: MITSUBISHI

Model: L400 Bus

Part Number: ADB33283

Vehicle Manufacturing/Engine:

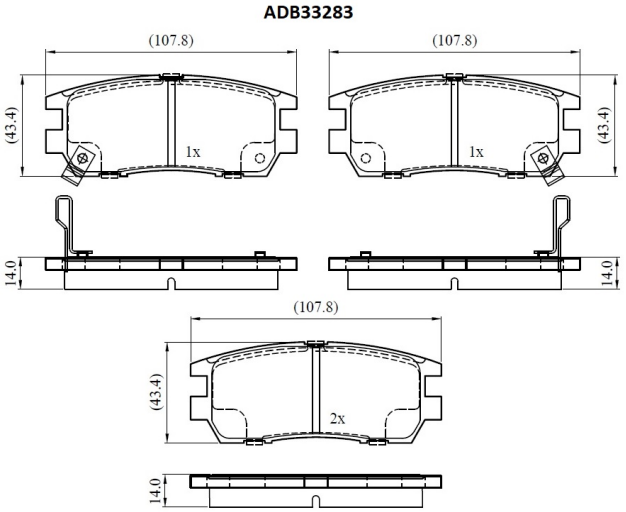

Specifications

Fitting Position	:	Rear
Model Date	:	1995-2000
Or. Caliper	:	

WVA	:	21840
FMSI	:	
Length	:	107.8
Width	:	43.4
Thickness	:	14