Make: MITSUBISHI

Model: Lancer (->84)

Part Number: ADB0111

Vehicle Manufacturing/Engine:

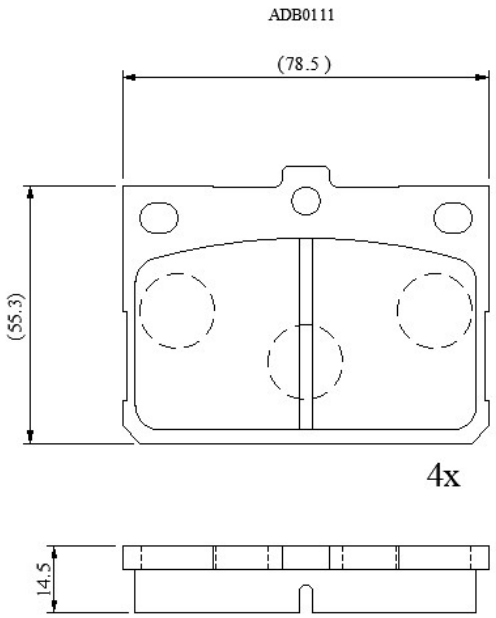

Specifications

Fitting Position	:	Front
Model Date	:	01/74-01/80
Or. Caliper	:	Sumitomo
WVA	:	20703
FMSI	:	
Length	:	78.5
Width	:	59.5
Thickness	:	14.5