Make: MITSUBISHI

Model: LANCER VIII

Part Number: ADB32859

Vehicle Manufacturing/Engine:

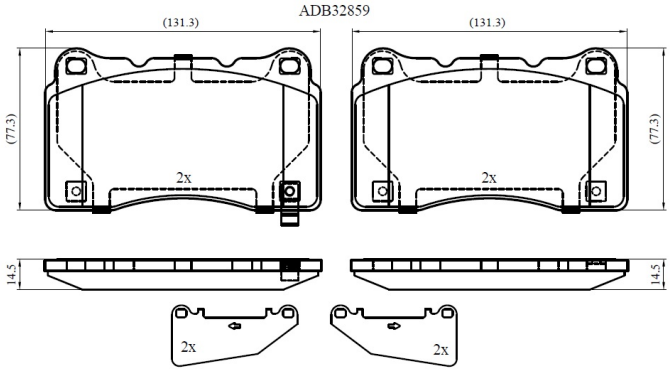

Specifications

Fitting Position	:	Front
Model Date	:	2008-2015
Or. Caliper	:	
WVA	:	25,85,02,58,51,25,852
FMSI	:	

Length	:	131.8
Width	:	77
Thickness	:	14.8