Make: MITSUBISHI

Model: Montero

Part Number: ADB3233

Vehicle Manufacturing/Engine:

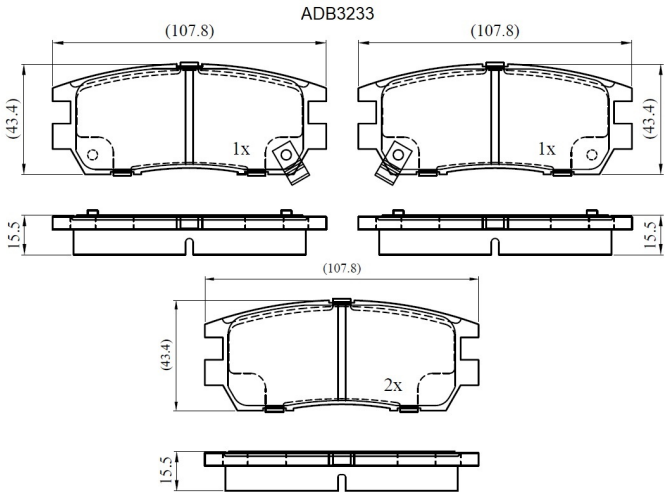

Specifications

Fitting Position	:	Rear
Model Date	:	04/91->
Or. Caliper	:	Akebono

WVA	:	21842
FMSI	:	
Length	:	107.8
Width	:	43.5
Thickness	:	15.5