Make: MITSUBISHI

Model: Montero

Part Number: ADB3234

Vehicle Manufacturing/Engine:

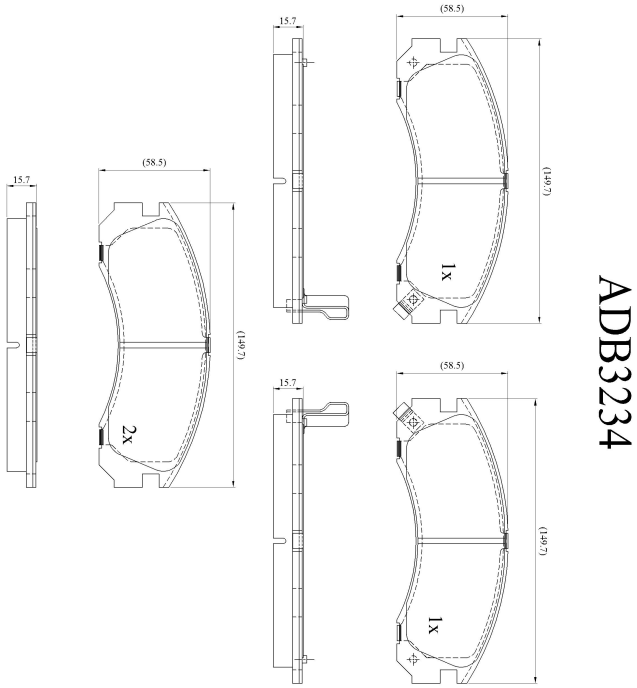

Specifications

Fitting Position	:	Front
Model Date	:	04/91->
Or. Caliper	:	Akebono
WVA	:	21769
FMSI	:	
Length	:	149.7
Width	:	58.5
Thickness	:	15.7