Make: MITSUBISHI

Model: Tredia

Part Number: ADB0211

Vehicle Manufacturing/Engine:

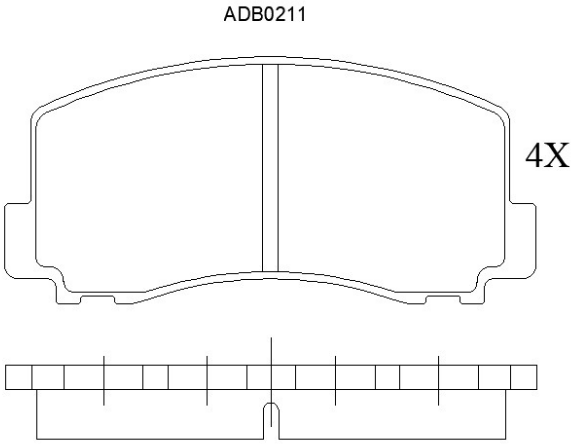

Specifications

Fitting Position	:	Front
Model Date	:	01/83-10/85
Or. Caliper	:	Akebono

WVA	:	20956
FMSI	:	
Length	:	107.75
Width	:	50
Thickness	:	15