Make: NISSAN

Model: Almera (N16 Series 00->)

Part Number: ADB0474

Vehicle Manufacturing/Engine:

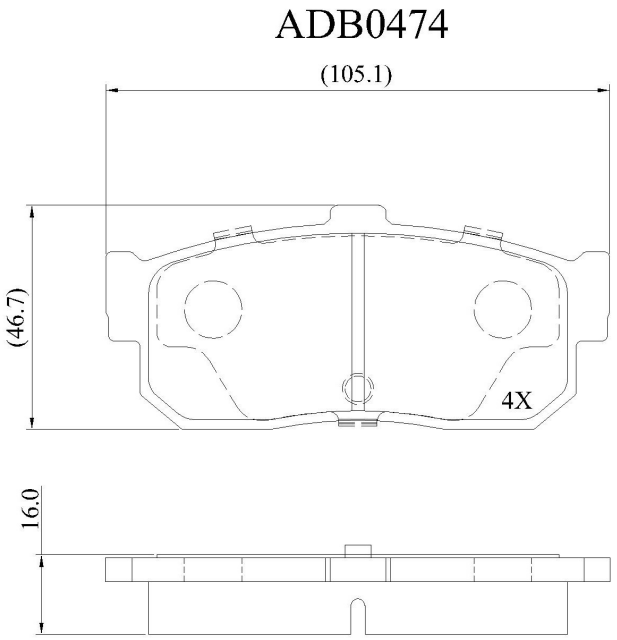

Specifications

Fitting Position	:	Rear

Model Date	:	01/00->
Or. Caliper	:	Sumitomo
WVA	:	21713
FMSI	:	
Length	:	105.1
Width	:	46.7
Thickness	:	16