Make: NISSAN

Model: Cherry / Pulsar

Part Number: ADB0122

Vehicle Manufacturing/Engine:

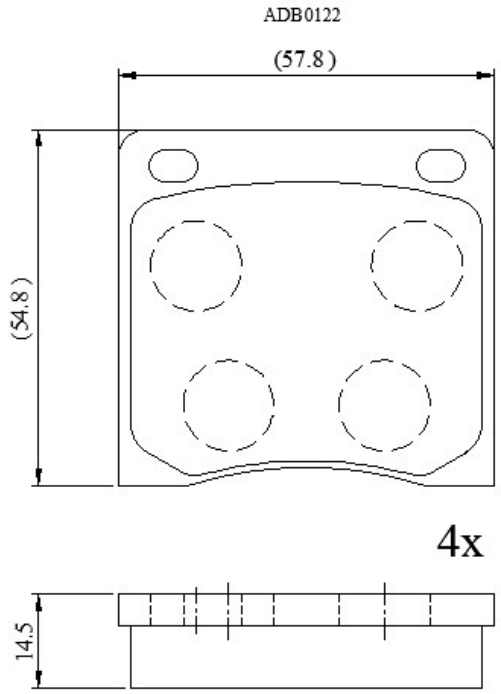

Specifications

Fitting Position	:	Front
Model Date	:	01/77-12/78

Or. Caliper	:	Tokico
WVA	:	20128
FMSI	:	
Length	:	57.75
Width	:	54.75
Thickness	:	14.5