Make: NISSAN

Model: Primera (->03/02)

Part Number: ADB0740

Vehicle Manufacturing/Engine:

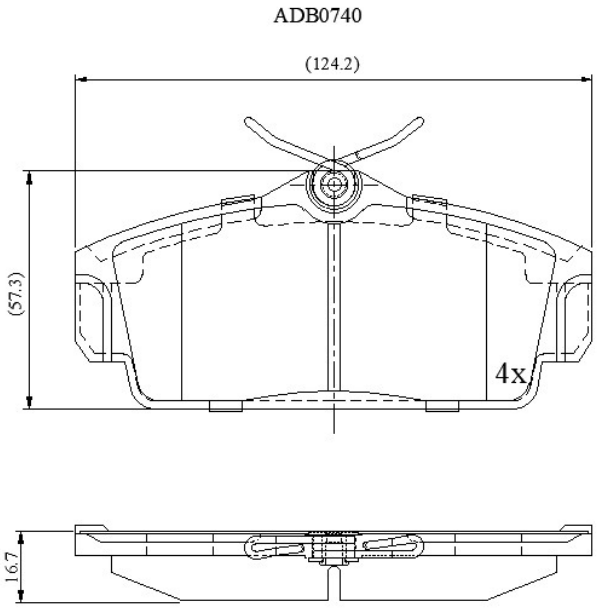

Specifications

Fitting Position	:	Front

Model Date	:	05/98-03/02
Or. Caliper	:	Lucas
WVA	:	23463
FMSI	:	
Length	:	124
Width	:	57.3
Thickness	:	17.2