Make: NISSAN

Model: Sunny/Sentra (01/91->)

Part Number: ADB0559

Vehicle Manufacturing/Engine:

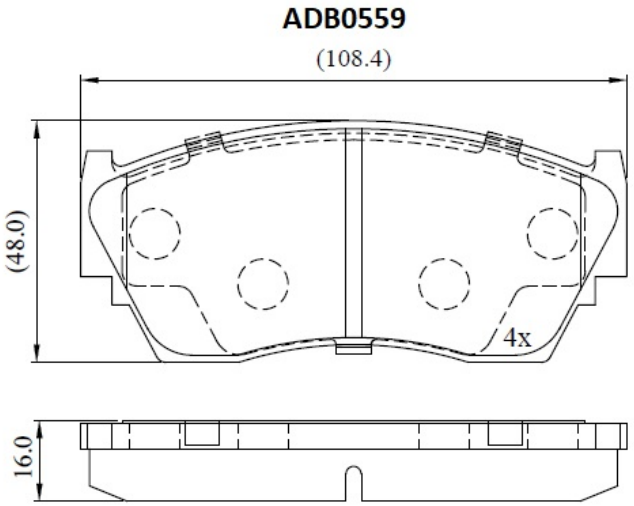

Specifications

Fitting Position	:	Front
Model Date	:	01/91-01/96
Or. Caliper	:	Sumitomo

WVA	:	21657
FMSI	:	
Length	:	108.4
Width	:	47.8
Thickness	:	16