Make: NISSAN

Model: Sunny/Sentra (01/91->)

Part Number: ADB3193

Vehicle Manufacturing/Engine:

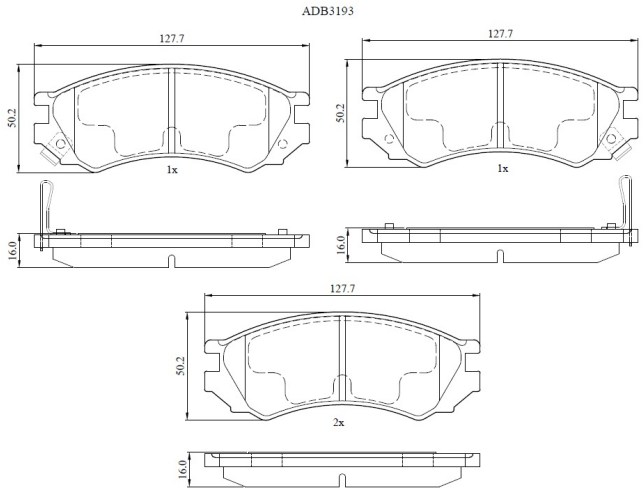

Specifications

Fitting Position	:	Front
Model Date	:	01/91-01/96
Or. Caliper	:	Akebono

WVA	:	21386
FMSI	:	
Length	:	127.7
Width	:	50.3
Thickness	:	16