Make: NISSAN

Model: Sunny/Sentra (01/91->)

Part Number: ADB3955

Vehicle Manufacturing/Engine:

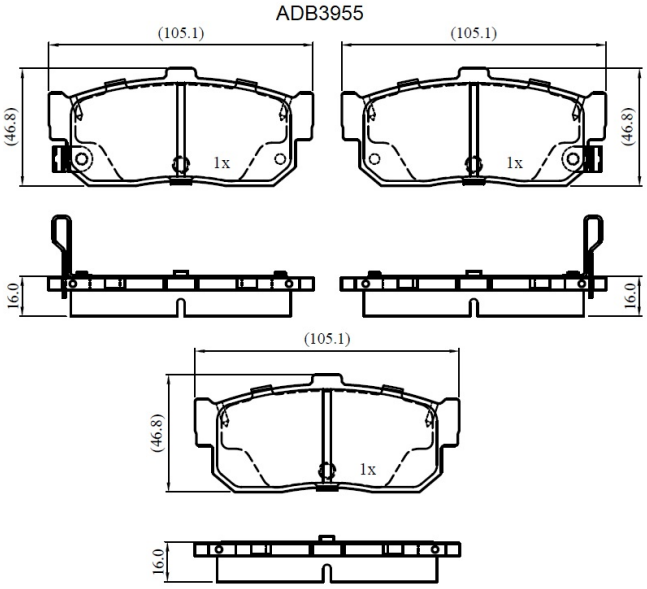

Specifications

Fitting Position	:	Rear
Model Date	:	01/91-01/96

Or. Caliper	:	Sumitomo
WVA	:	21715
FMSI	:	
Length	:	105.1
Width	:	46.7
Thickness	:	16