Make: NISSAN

Model: Sunny/Sentra (82->01/91)

Part Number: ADB3207

Vehicle Manufacturing/Engine:

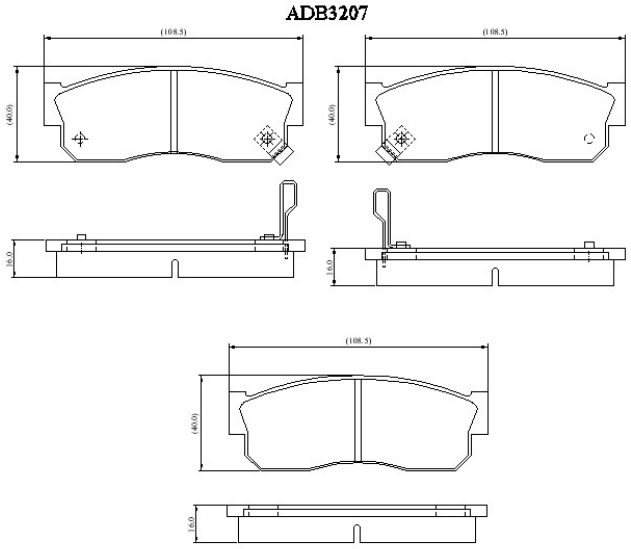

Specifications

Fitting Position	:	Front
Model Date	:	01/82-07/91

Or. Caliper	:	Sumitomo
WVA	:	2,12,24,20,958
FMSI	:	
Length	:	108.5
Width	:	40
Thickness	:	16