Make: NISSAN

Model: TIIDA Saloon

Part Number: ADB33006

Vehicle Manufacturing/Engine:

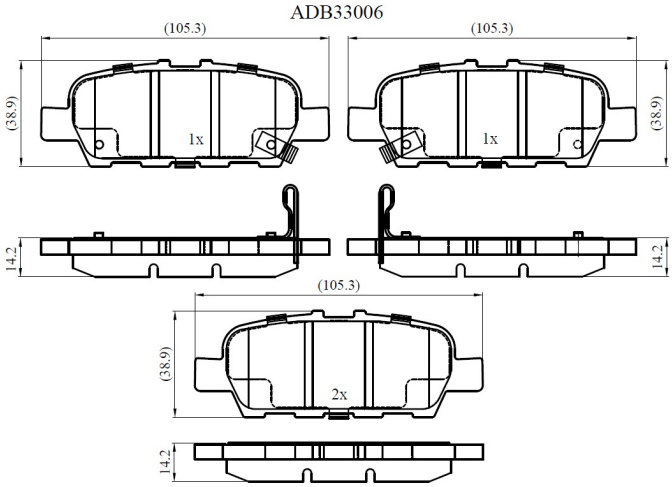

Specifications

Fitting Position	:	Rear
Model Date	:	2007-2012
Or. Caliper	:	
WVA	:	23871

FMSI	:
Length	:
Width	:
Thickness	: