Make: NISSAN

Model: X-TRAIL II

Part Number: ADB03124

Vehicle Manufacturing/Engine:

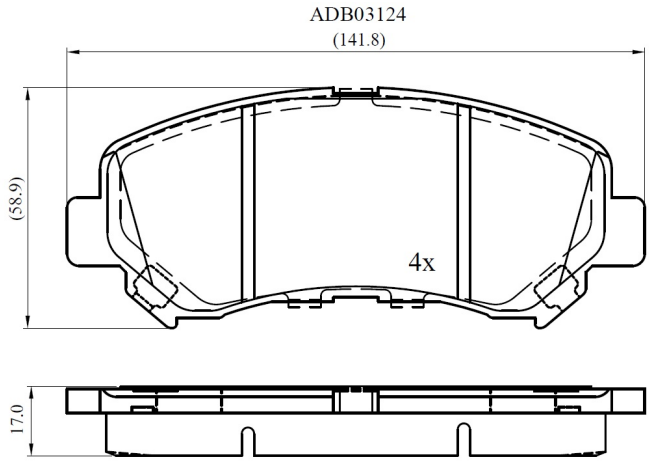

Specifications

Fitting Position	:	Front
Model Date	:	2007-2013
Or. Caliper	:	
WVA	:	24632

FMSI	:	
Length	:	141.8
Width	:	58.9
Thickness	:	17