Make: OPEL

Model: Agila

Part Number: ADB32008

Vehicle Manufacturing/Engine:

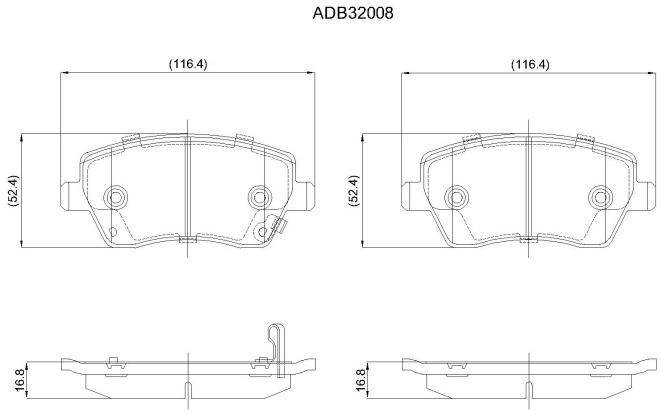

Specifications

Fitting Position	:	Front
Model Date	:	11/2010->
Or. Caliper	:	
WVA	:	23973, 24403

FMSI	:	
Length	:	116.6
Width	:	52.6
Thickness	:	16.8