Make: OPEL

Model: ASTRA H TwinTop

Part Number: ADB32852

Vehicle Manufacturing/Engine:

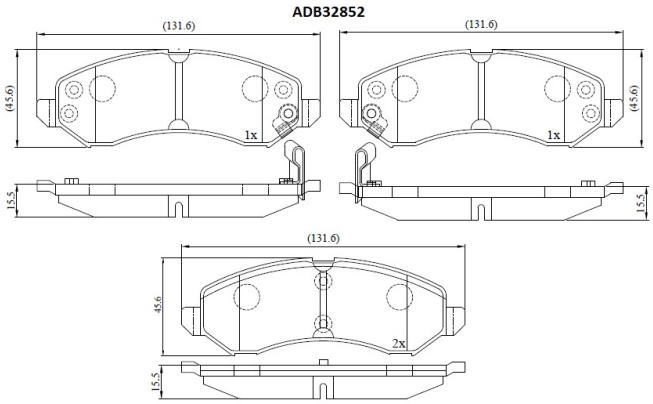

Specifications

Fitting Position	:	Rear
Model Date	:	2005-2010
Or. Caliper	:	
WVA	:	23417
FMSI	:	

Length	:
Width	:
Thickness	: