## Make: OPEL

## Model: ASTRA J Coupe

## Part Number: ADB32930

## Vehicle Manufacturing/Engine:

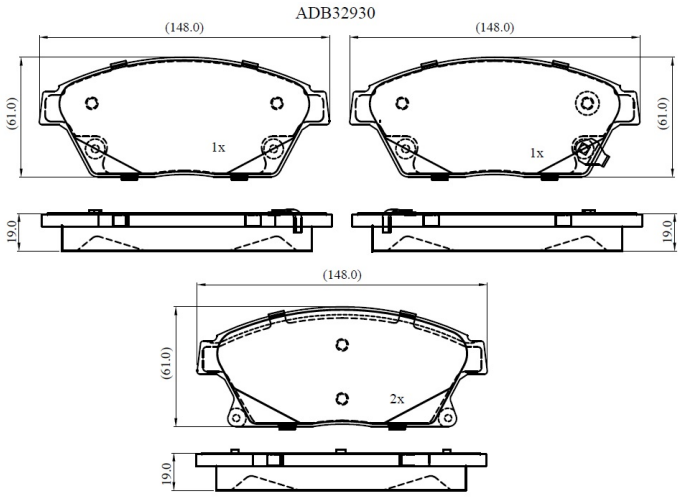


### Specifications

| | | |
|---|---|---|
| **Fitting Position** | : | Front |
| **Model Date** | : | 2011-2015 |
| **Or. Caliper** | : | |
| **WVA** | : | 25034 |

| | |
|---|---|
| **FMSI** | : |
| **Length** | : |
| **Width** | : |
| **Thickness** | : |