Make: OPEL

Model: Astra J Saloon

Part Number: ADB32950

Vehicle Manufacturing/Engine:

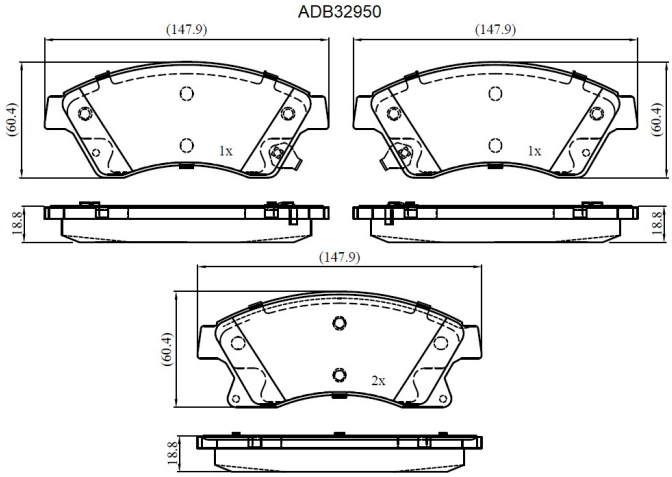

Specifications

Fitting Position	:	Front
Model Date	:	2012-
Or. Caliper	:	
WVA	:	25031

FMSI	:
Length	:
Width	:
Thickness	: