Make: OPEL

Model: Astra J

Part Number: ADB32024

Vehicle Manufacturing/Engine:

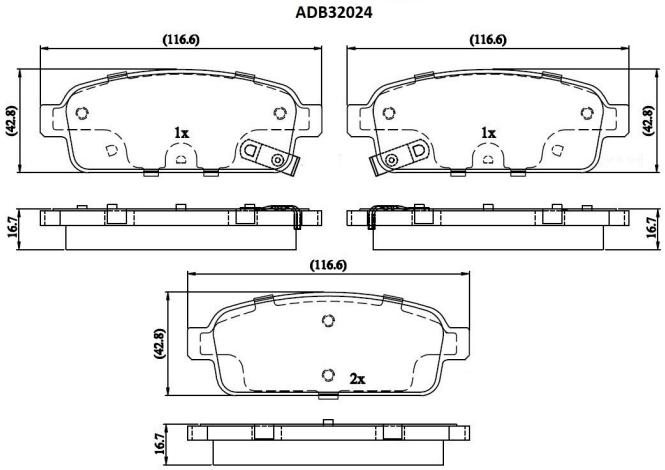

Specifications

Fitting Position	:	Rear
Model Date	:	12/09-
Or. Caliper	:	Bosch
WVA	:	25096, 25097,25098

FMSI	:	
Length	:	116.6
Width	:	42.8
Thickness	:	16.7