Make: OPEL

Model: Astra J

Part Number: ADB32037

Vehicle Manufacturing/Engine:

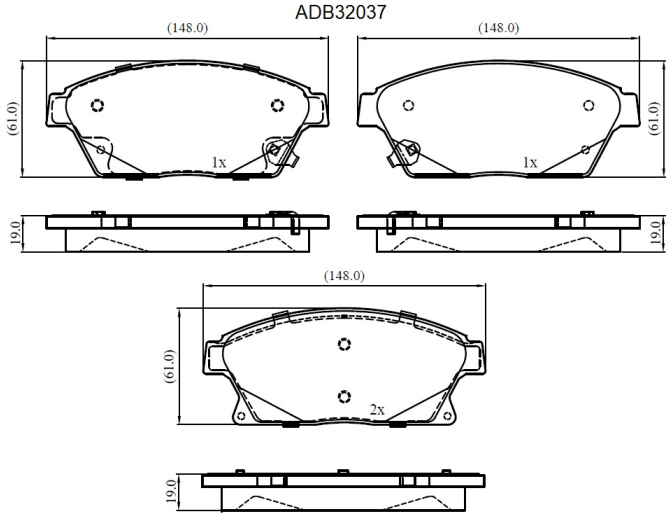

Specifications

Fitting Position	:	Front
Model Date	:	12/09-
Or. Caliper	:	Bosch

WVA	:	25034, 25035,25036
FMSI	:	
Length	:	148
Width	:	61
Thickness	:	19