## Make: OPEL

## Model: Astra K 300 Disc Dia

## Part Number: ADB32309

## Vehicle Manufacturing/Engine:

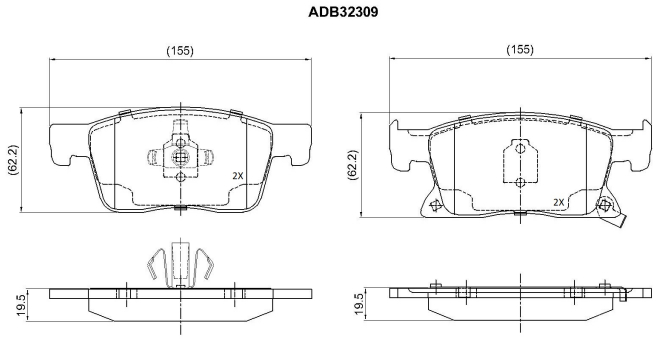


### Specifications

| | | |
|---|---|---|
| **Fitting Position** | : | Front |
| **Model Date** | : | 15- |
| **Or. Caliper** | : | |
| **WVA** | : | |
| **FMSI** | : | |
| **Length** | : | 155 |

| | | |
|---|---|---|
| **Width** | : | 62.2 |
| **Thickness** | : | 19.5 |