Make: OPEL

Model: COMBO Tour

Part Number: ADB13244

Vehicle Manufacturing/Engine:

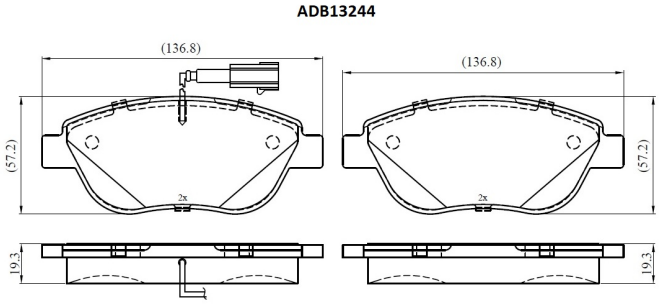

Specifications

Fitting Position	:	Front
Model Date	:	2012-
Or. Caliper	:	
WVA	:	23709
FMSI	:	

Length	:	136.8
Width	:	57.2
Thickness	:	19.3