Make: OPEL

Model: INSIGNIA B Grand Sport

Part Number: ADB32370

Vehicle Manufacturing/Engine:

ADB32370

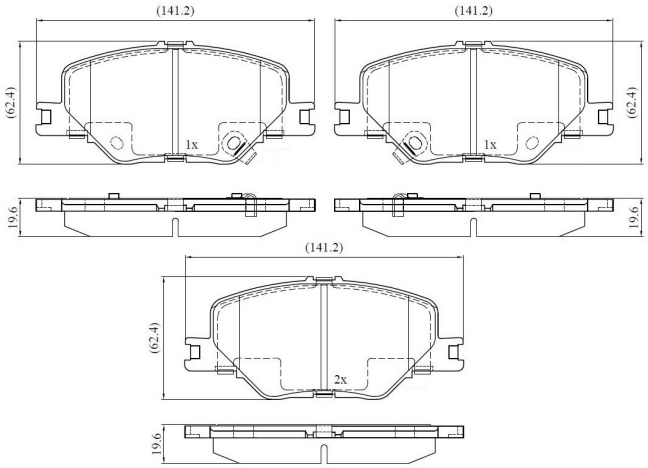

Specifications

Fitting Position	:	Front
Model Date	:	3/2017 >

Or. Caliper	:	
WVA	:	22,83,82,28,39,22,840
FMSI	:	
Length	:	141.2
Width	:	62.4
Thickness	:	19.6