Make: OPEL

Model: INSIGNIA B Grand Sport

Part Number: ADB32373

Vehicle Manufacturing/Engine:

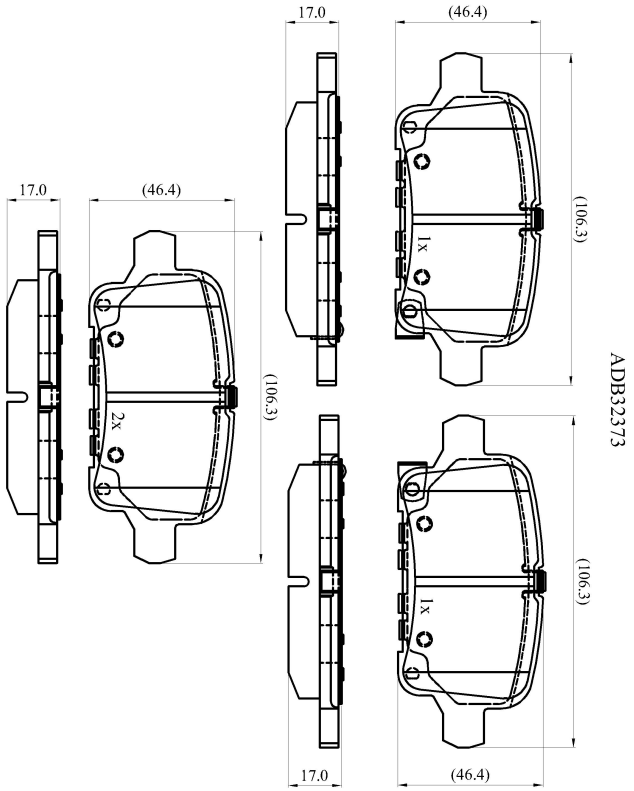

Specifications

Fitting Position	:	Rear
Model Date	:	2017-
Or. Caliper	:	
WVA	:	
FMSI	:	
Length	:	106.3
Width	:	46.4
Thickness	:	17